Print time: 17 March 2021 09:33:18
File name:GV_1290_V9B.dwg

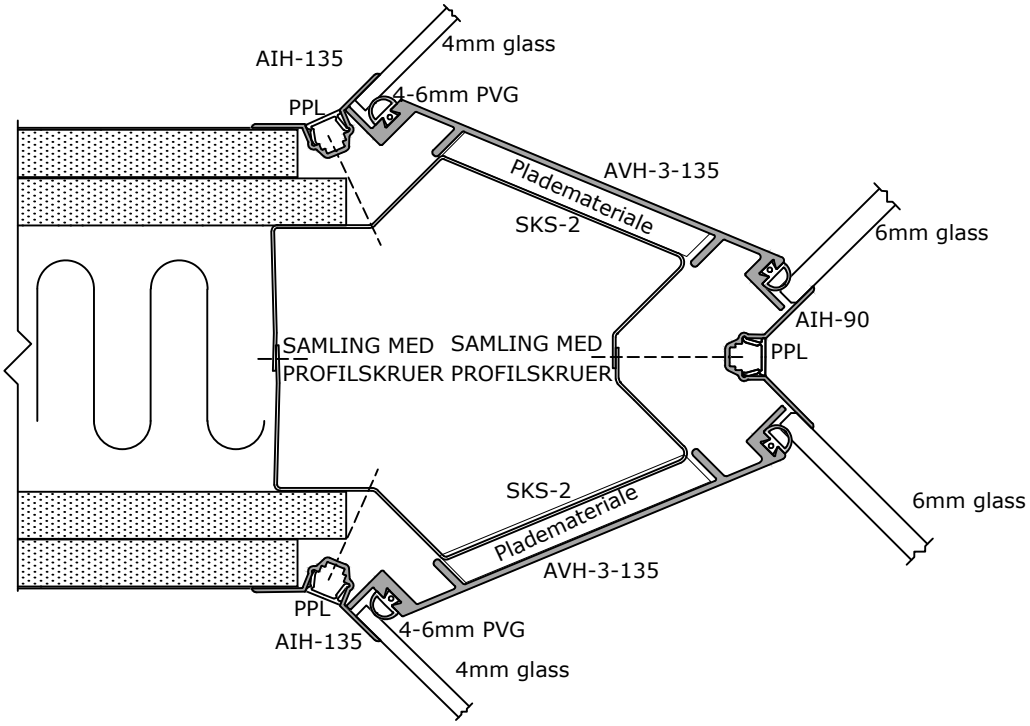

DEKO	**DEKO** **Tlf./Tel:** +45 43 55 77 11 www.deko.dk / www.deko.com	**Projekt/Project:** DEKO GV 1290	
Sags Nr./Case No.:	**Emne/Subject:** V9B	**Dato/Date:**	**Tegn. Nr.** **Sheet No.** 1/1
Mål/Scale: 1:2		**Revideret/Revision:** 2021-03-17-VXX	**Signatur** **Signature** MAS